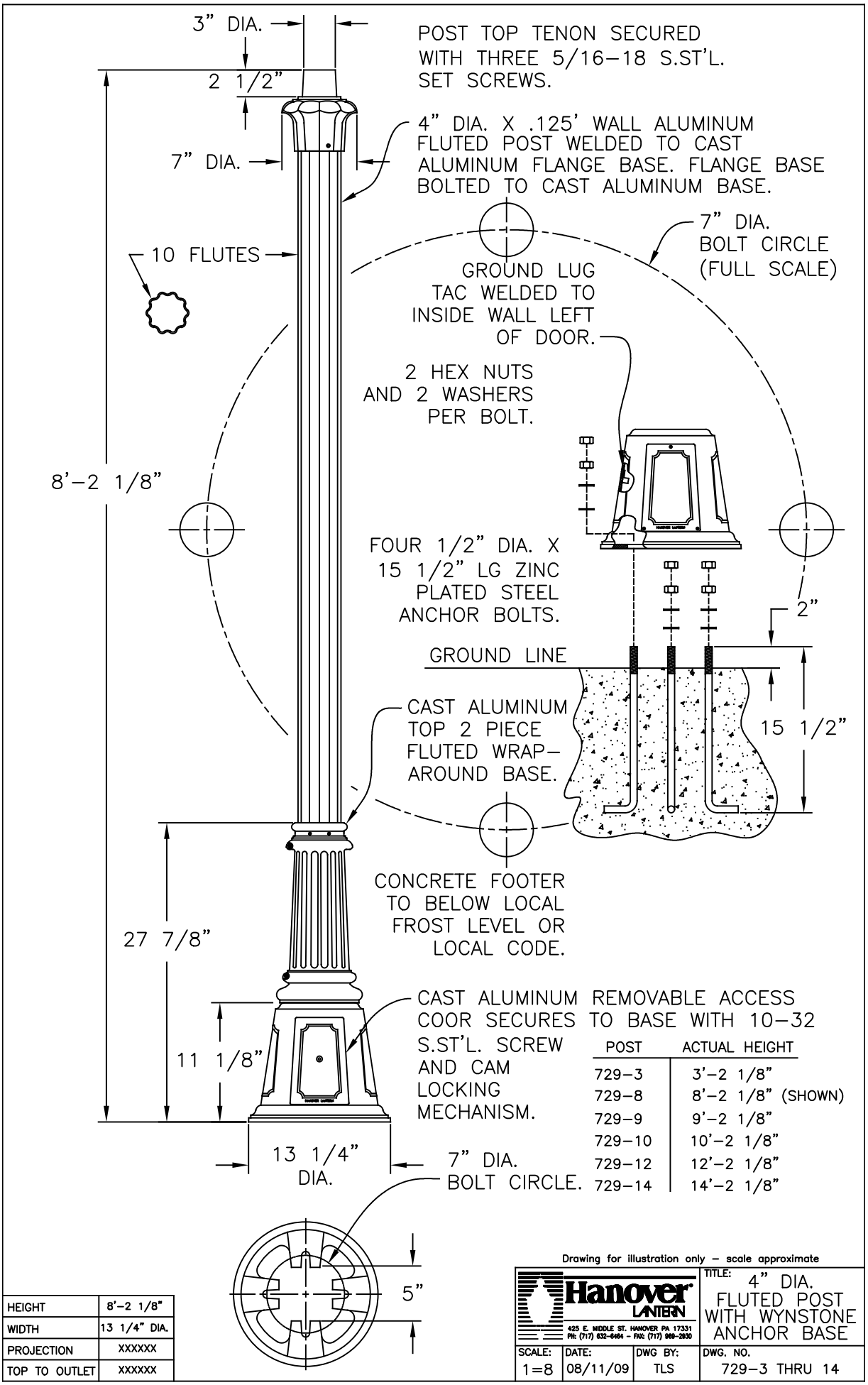

POST	ACTUAL HEIGHT
729–3	3'–2 1/8"
729–8	8'–2 1/8" (SHOWN)
729–9	9'–2 1/8"
729–10	10'–2 1/8"
729–12	12'–2 1/8"
729–14	14'–2 1/8"